BEECH OVENS™
WORLD LEADER IN SPECTACULAR COOKING EQUIPMENT

36 Gladys Street, Stones Corner,
Queensland, Australia, 4120
Tel: (617) 3397 0277
Fax: (617) 3397 0030
e-Mail: sales@beechovens.com.au
Web: www.beechovens.com
ABN 14 115 371 741

PRODUCT

MANUFACTURER

BEECH OVENS

MODEL NUMBER

DCK0900

PRODUCT DESCRIPTION

Round Duck Oven – Wood or Gas

Ext Diameter:	Int Diameter:	Height:
1250mm.	900mm.	1930mm.

MANUFACTURED IN AUSTRALIA
www.beechovens.com

SPECIFICATIONS

Purpose	Wood or Gas stone hearth oven for cooking Ducks and other meat dishes.
Construction	High grade castable ceramic encased in 5mm steel housing supplied in 2 major sections with removable legs. 50mm insulation covers oven body, 25mm air gap between insulation and non-combustible façade material. 75mm stone hearth floor above 25mm insulating board and 5mm steel plate.
Firing Type	Wood, Gas or Gas Back-up *(Wood and Gas)*
Gas	Gas - 60Mj NAT / 60Mj LPG *(Bread-loaf Burner)*
Exhaust Requirements	Under Canopy/Hood **OR** Beech Spray Filter *(Wet Scrubber)* **OR** Flue Transition.
MEP Ratings	Gas Connection – 19mm (3/4”) line (1 per burner). Electrical *(for Gas Fired)* – 220-240VAC @ 50Hz 1 Phase 10 AMP Spray Filter Water Inlet– 15mm @ 30 L/Hr. Spray Filter Water Outlet – 40mm Copper Drain – To drain via tundish visible to operator. Spray Filter Water Solenoid – 220-240VAC @ 50Hz 1 Phase 10AMP *(Linked to exhaust fan – Fan ON = Solenoid ON)* Spray Filter Exhaust Ratings – 300mm x 300mm connection, 130Pa Static Pressure, 700l/sec Spray Filter Cool air Make-up unit – Ensure a fresh air supply is available. No connection required.
Capacity	Cooks approximately 8 Ducks in approximately 50 minutes.
Accessories	Duck Tools *(Spigot Brush, 20 x Hanging Hooks, Duck retriever)* Drip Tray, Fire Tray and Grate Stainless Steel Hearth *(Optional – shown in image)* Spray Filter *(Optional – shown in image)*
Safety	Oven and associated systems are CE and UL compliant. UL Tested to Subject 2162 *(Wood/Gas Fired).* Complies to USA “ANSI-NSF standard 4” Exterior temperatures below 50°C. Compliant Gas systems with flame failure device.
Special Requirements	Façade and Oven surround to be made of non-combustible material. Access and ventilation panel to both above and below oven - minimum 600mm x 600mm Metal infill required between oven spigot and façade to prevent hot air and flames entering the façade cavity.

NOTES:
CONNECTION TO APPROVED FLUE/DUCTING REQUIRED. BEECH OVENS RECOMMEND INSTALLATIONS UNDER APPROVED CANOPY.
(CHECK LOCAL CODES AND REGULATIONS)

SERVICES REQUIRED - SEE BLUE TEXT

THE OVEN IS DELIVERED IN THREE (3) SECTIONS:
UPPER SECTION - Approx 780kg
BASE SECTION - Approx 300kg
LEGS - Approx 8kg EACH

TOTAL WEIGHT = Approx 1150kg

FOR INSTALLATION INSTRUCTIONS SEE INSTALLATION AND OPERATION MANUAL

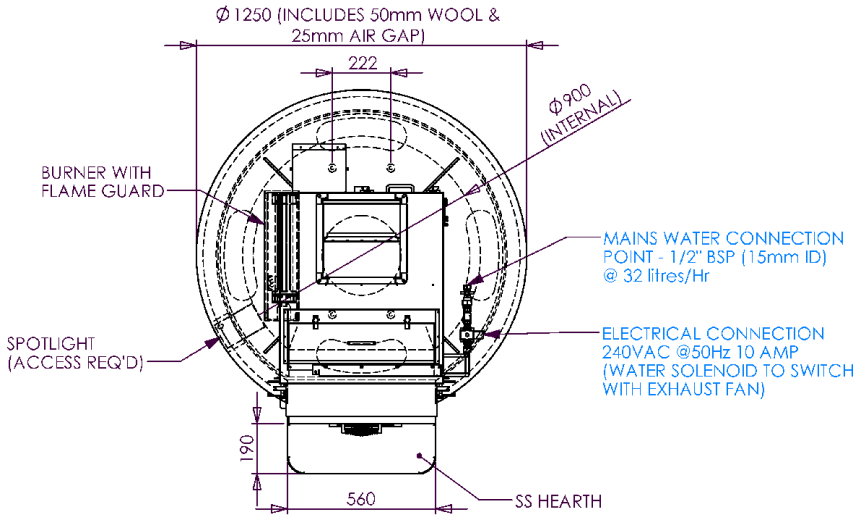

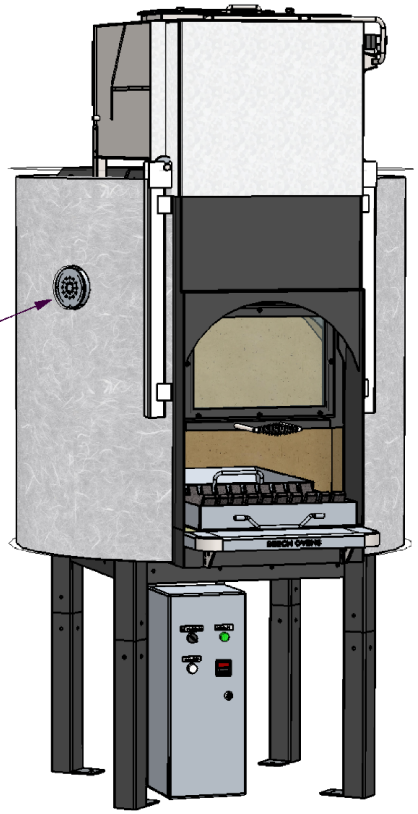

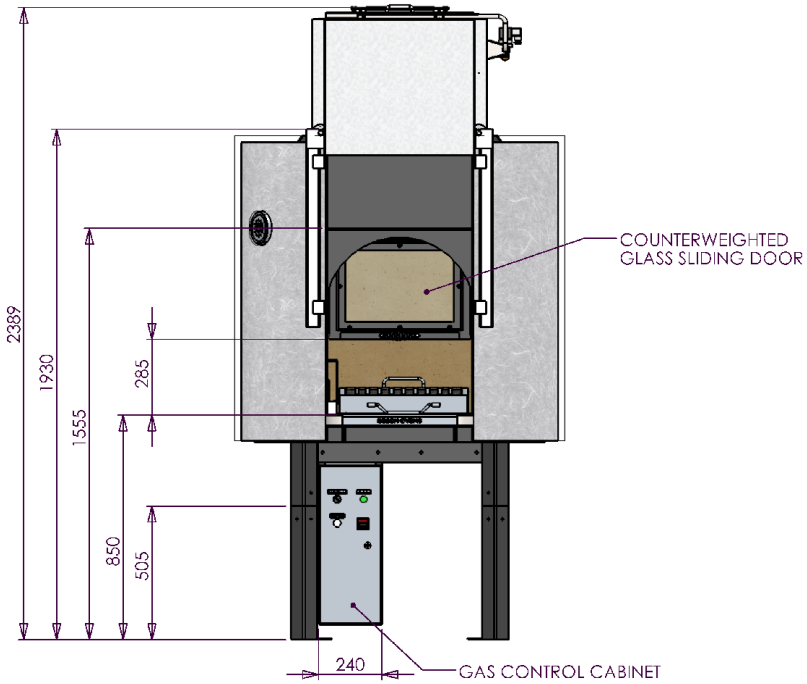

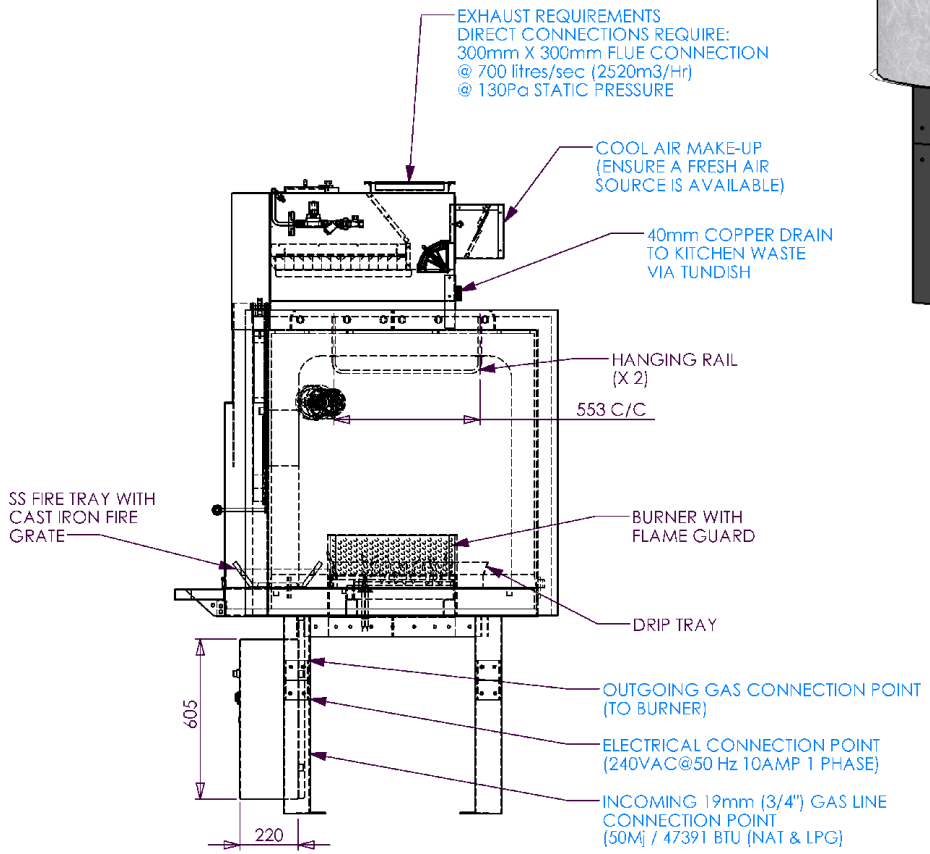

REV.	DESCRIPTION OF CHANGES	DATE	CHANGED BY
0	ISSUED FOR CONSTRUCTION		

LAST EDITED: Monday, 21 November 2011 1:46:48 PM

©Copyright 2006 Beech Ovens Pty Ltd. All rights reserved.

BEECH OVENS
Australia
(617) 3397 0277

Drawn	Checked	Scale	Date
S Trood		1:20	21/11/2011

DUCK OVEN Ø900mm INTERNAL
GBL - GAS BACK-UP LEFT
SS HEARTH_SPRAY FILTER_SPOT(L)

A3

NTS - SITE MEASURE

DCK0900-2013 - DETAILS